Forklift



CHANGE YOUR MIND
NOT YOUR BATTERY

PALLET TRUCK

BYD PALLET TRUCK
(1400kg/1600kg/20000kg/2500kg/3000kg)

Lithium | BYD Iron-Phosphate

Core Technology

With many years of experience and innovation, BYD has the most reliable battery technology.



BYD started as a battery manufacturer, producing its first battery in 1997. Currently, BYD batteries are widely applied to passenger vehicles, cabs, buses, coaches, logistic vehicles, sanitation trucks and other commercial vehicles. In order to accomplish that, we believe in technology innovation and rigorous production processes. BYD batteries have been road-proven in over 10 million new energy passenger cars and over 80,000 electric buses around the world.

We are constantly refining our manufacturing, pack design and interconnection hardware to further enhance the battery safety profile. Samples from each batch must pass rigorous impact, collision, vibration and external fire testing before being released for electric vehicle integration.

BYD Iron-Phosphate technology

BYD Iron-Phosphate electric forklift batteries are a major revolution for the industry. A solution for the present and future, synonymous with savings, sustainability, cleanliness, safety and care for the environment.





The BYD battery revolution

BYD has accumulated vast experience to predict and respond to global sustainability challenges. Currently, BYD's patented BYD Iron-Phosphate batteries have been used in over 100+ vehicle models, including passenger, commercial, and off-highway vehicles.

Compared to equivalent equipment powered by traditional lead acid batteries, BYD batteries require no maintenance, have a shorter charge time, a longer working life, and use up to 40% less energy. Combined with BYD's intelligent chargers, charging from empty to full can be achieved in under an hour, providing comfortably enough charge for a full eight-hour shift. Furthermore, BYD batteries can be topped-up during short breaks in operations, thus guaranteeing maximum uptime at the lowest-possible cost.

Unlike other Lithium-ion batteries featuring on competitors' forklifts, BYD designs, develops and manufactures its own batteries and chargers, meaning the entire energy ecosystem is optimised to offer maximum performance for your investment.

BYD Iron-Phosphate Battery

Savings

No battery changes, no maintenance, no distilled water or charger room, and with an energy consumption which is well below average.

Opportunity Charging

Battery can be partially topped up frequently e.g. during lunch break with no detriment to battery life or capacity.

Sustainable

No pollution from heavy metals or corrosive acid, making BYD Iron-Phosphate batteries the most ecologically friendly on the market.

Long life

Unrivaled industrial leading warranty 8 year /10000 hours thanks to active battery intelligent protection system.

Safety

No risk of explosion or fire, no flammable gases emissions, nor harm to the health of your employees.

Fast-Charging

Charging power up to 2.4 kw , with possibility to reduce charging time down to 1 hour .

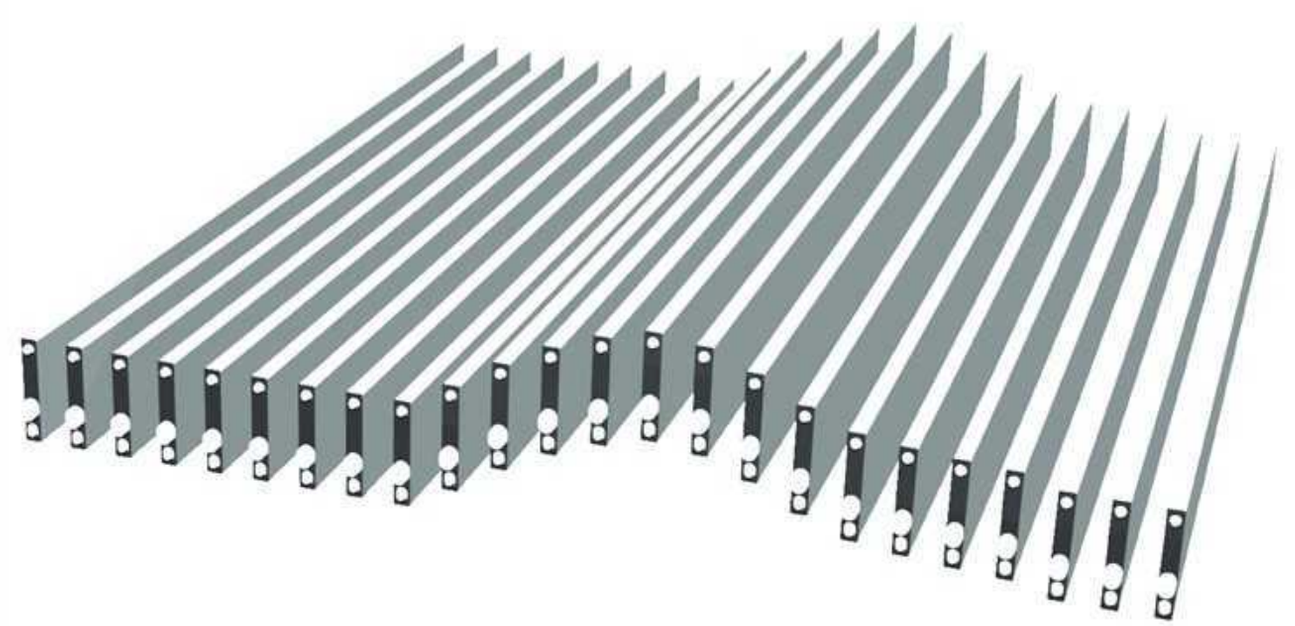

LiP14/16/20/25/30
PEDESTRIAN PALLET TRUCK



Family-oriented design

- Using the full range of platform design, we can provide customers with variety of product needs. The load capacity covers 1.4T, 1.6T, 1.8 2.0T, and bigger ones 2.5T, 3.0T. With the variety of combinations, we can provide efficient service. x



Muti-Functional operation desk

- USB charging port supplies power for more devices
  Multi-functional dashboard can display battery level, driving speed, fault code
  Emergency stop switch code/card lock provides high security.

5 points suspension chassis:

- The whole series of products has 5 wheels including 2 symmetrical balance wheels. A spring damping system was also equipped. It provides a smooth, safe and friendly operation experience.

Operating friendly :

- Thanks to the development of the new platform, the turning radius of the product is smaller, the minimum Wa is only 1413 mm , making operation more user-friendly and easy.

LiP20S/25S/30S
ELECTRIC RIDE-ON PALLET TRUCK

LiP20P/25P
ELECTRIC STAND-ON PALLET TRUCK



Family-oriented design

- Using the full range of platform design, we can provide customers with variety of product needs. The load capacity covers 2.0T 2.5 and 3.0T . The whole series of models adopts professional appearance design, smooth lines, compact shape, combined with market demand, give full consideration to ergonomic design, fashion and environmental protection.

- Muti-Functional operation desk
  USB charging port supplies power for more devices
  Multi-functional dashboard can display battery level, driving speed, fault code
  Emergency stop switch code/card lock provides high security.

Operating friendly :

- Thanks to the development of the new platform, the turning radius of the product is smaller, the minimum Wa is only 1580(LiP20S) ,1890(LiP20P)mm .for LiP20P series , making operation more user-friendly and easy.



Adjustable height of Steering handle

- Lis20P series equipped adjustable height of Steering handle ,adjusted up and down to meet the needs of different operators,It provides a smooth, safe and friendly operation experience.



5 points suspension chassis:

- The whole series of products has 5 wheels including 2 symmetrical balance wheels. An active suspension damping system was also equipped. It provides a smooth, safe and friendly operation experience.

ADVANTAGES OF BLADE BATTERY





Adaptability

- 60℃ Discharge capacity retention >99%
  PACK-20℃ Discharge capacity retention>90%
  Battery PACK with heating function ,makes the professional solution possibility for cold store .

Cyclability & Safety

- 45℃ cycle >2000 times
  room temperature cycle >4000 times
  long warranty with cell -penetration and IP67 protection.



Various optial

- 65/130/216/260Ah, varies of capacity matches different work condition request.
  216/260Ah, optional 200A high power charger equipped with standard on-board charger.
  Note:130Ah and 260Ah will be avaliabe in May.

LiP14/16/18 Pedestrian pallet truck

Identification	1.1	Manufacturer			BYD			
	1.2	Model			LiP14	LiP16	LiP18	LiP20
	1.3	Drive			Electric			
	1.4	Operator type			Pedestrian			
	1.5	Rated capacity	Q	kg	1400	1600	1800	2000
	1.6	Load center	C	mm	600			
	1.7	Front overhang	X	mm	956(lowered)/909(lifted)			
	1.8	Wheel base	y	mm	1315(lowered)/1270(lifted)			
Weights	2.1	Net weight including battery		kg	440		450	
	2.2	Axle load with load, front/rear		kg	686/1154	735/1035	792/1458	840/1610
	2.3	Axle load without load, front/rear		kg	343/97		350/100	
Wheels	3.1	Wheel type			PU			
	3.2	Wheel size, front		mm	Φ230 ×75			
	3.3	Wheel size, rear		mm	ø85 ×45		Φ85 ×70	
	3.4	Auxiliary wheel size		mm	Φ100 ×50			
	3.5	Wheels, number front/rear (x=driven)			1X+2/2 （4）			
	3.6	Track width, front	b10	mm	500			
	3.7	Track width, rear	b11	mm	370			
Basic Dimensions	4.1	Lift height	h3	mm	120			
	4.2	Height of support arms in the horizontal position	h15	mm	750			
	4.3	Height of support arms in the upright position	h14	mm	1235			
	4.5	Ground clearance, below fork	h13	mm	85			
	4.6	Overall length	l1	mm	1650			
	4.7	Length to face of forks	l2	mm	500			
	4.8	Overall width	b1	mm	720			
	4.9	Fork dimensions	s/e/l	mm	55 ×150 ×1150		55 ×180 ×1150	
	4.10	Width across forks	b2	mm	520		550	
	4.11	Ground clearance, center of wheelbase	m2	mm	30			
		Aisle width for pallets 1000×1200 crossways			2222			
	4.12	Aisle width for pallets 800×1200 lengthways	Ast	mm	2110			
	4.13	Turning radius(lifted)	Wa	mm	1415			
	5.1	Travel speed, with/without load		km/h	6/6			
Performance Data	5.2	Lifting speed, with/without load		mm/s	40/50			
	5.3	Lowering speed, with/without load		mm/s	50/40			
	5.4	Max. gradeability, with/without load		%	10/20		9/20	8/20
	5.5	Service brake			Mechanic			
	6.1	Drive motor, S2=60min		kw	1.2			
Motor	6.2	Type of drive motor			AC			
	6.3	Lift motor		kw	1.2			
	6.4	Type of lift motor			DC			
	6.6	Battery voltage/capacity		V/Ah	24/210			
	6.7	Battery weight		kg	85			
Others	7.1	Noise level at operator's ear		dB(A)	≤65			

*BYD reserves the right to alter and modify the design, features and technical parameters of its products at any given time and without pre-advice, as products are subject to ongoing and continuous development.

LiP25/30 Pedestrian pallet truck

Identification	1.1	Manufacturer			BYD	
	1.2	Model			LiP25	LiP30
	1.3	Drive			Electric	
	1.4	Operator type			Pedestrian	
	1.5	Rated capacity	Q	kg	2500	3000
	1.6	Load center	C	mm	600	
	1.7	Front overhang	X	mm	956(lowered)/909(lifted)	
	1.8	Wheel base	y	mm	1365(lowered)/1320(lifted)	
Weights	2.1	Net weight including battery		kg	510	
	2.2	Axle load with load, front/rear		kg	974/2036	1091/2419
	2.3	Axle load without load, front/rear		kg	386/123	
Wheels	3.1	Wheel type			PU	
	3.2	Wheel size, front		mm	Φ230 ×75	
	3.3	Wheel size, rear		mm	Φ85x70	
	3.4	Auxiliary wheel size		mm	Φ100 ×50	
	3.5	Wheels, number front/rear (x=driven)			1X+2/2 （4）	
	3.6	Track width, front	b10	mm	500	
	3.7	Track width, rear	b11	mm	370	
Basic Dimensions	4.1	Lift height	h3	mm	120	
	4.2	Height of support arms in the horizontal position	h15	mm	750	
	4.3	Height of support arms in the upright position	h14	mm	1235	
	4.5	Ground clearance, below fork	h13	mm	85	
	4.6	Overall length	l1	mm	1725	
	4.7	Length to face of forks	l2	mm	575	
	4.8	Overall width	b1	mm	724	
	4.9	Fork dimensions	s/e/l	mm	55 ×180 ×1150	
	4.10	Width across forks	b2	mm	550	
	4.11	Ground clearance, center of wheelbase	m2	mm	30	
		Aisle width for pallets 1000×1200 crossways			2292	
	4.12	Aisle width for pallets 800×1200 lengthways	Ast	mm	2180	
	4.13	Turning radius(lifted)	Wa	mm	1485	
	5.1	Travel speed, with/without load		km/h	6/6	
Performance Data	5.2	Lifting speed, with/without load		mm/s	50/70	40/70
	5.3	Lowering speed, with/without load		mm/s	50/40	60/40
	5.4	Max. gradeability, with/without load		%	8/20	6/20
	5.5	Service brake			Mechanic	
	6.1	Drive motor, S2=60min		kw	1.8	
Motor	6.2	Type of drive motor			AC	
	6.3	Lift motor		kw	2.2	
	6.4	Type of lift motor			DC	
	6.6	Battery voltage/capacity		V/Ah	24/210	
	6.7	Battery weight		kg	85	
Others	7.1	Noise level at operator's ear		dB(A)	≤65	

*BYD reserves the right to alter and modify the design, features and technical parameters of its products at any given time and without pre-advice, as products are subject to ongoing and continuous development.

LiP20P/25P Electric stand-on pallet truck

Identification	1.1	Manufacturer			BYD	BYD
	1.2	Model			LiP20P	LiP25P
	1.3	Drive			Electric	
	1.4	Operator type			Stand-on	
	1.5	Rated capacity	Q	kg	2000	2500
	1.6	Load center	C	mm	600	
	1.8	Front overhang(Lifted/lowered)	X	mm	850/935	
	1.9	Wheel base(Lifted/lowered)	y	mm	1240/1320	
Weights	2.1	Net weight including battery		kg	875	895
	2.2	Axle load with load, front/rear		kg	1216/1659	1351/2044
	2.3	Axle load without load, front/rear		kg	745/130	762/133
Wheels	3.1	Wheel type			PU	
	3.2	Wheel size, front		mm	Φ230×75	Φ254×102
	3.3	Wheel size, rear		mm	Φ85x110/Φ85x75	
	3.4	Auxiliary wheel size		mm	Φ100×50	
	3.5	Wheels, number front/rear (x=driven)			1×+2/2(4)	
	3.6	Track width, front	b10	mm	510	
	3.7	Track width, rear	b11	mm	370	
Basic Dimensions	4.4	Lift height	h3	mm	120	
	4.9	Height of support arms, Min./Max.		mm	1290/1350	
	4.15	Ground clearance, below fork	h13	mm	85	
	4.19	Overall length(pedal folded/down)	l1	mm	2215	
	4.20	Length to face of forks	l2	mm	1065	
	4.21.1	Overall width	b1	mm	732	
	4.22	Fork dimensions	s/e/l	mm	55×180×1150	
	4.25	Width across forks	b5	mm	640/550	
	4.32	Ground clearance, center of wheelbase	m2	mm	30	
	4.34.1	Aisle width for pallets 1000×1200 crossways			2705	
	4.34.2	Aisle width for pallets 800×1200 lengthways	Ast	mm	2620	
	4.35	Turning radius(lifted)	Wa	mm	1890	
Performance Data	5.1	Travel speed, with/without load		km/h	9.5/12	
	5.2	Lifting speed, with/without load		mm/s	40/50	50/70
	5.3	Lowering speed, with/without load		mm/s	50/40	50/50
	5.8	Max. gradeability, with/without load		%	8/15	6/16
	5.10	Service brake			Mechanic	
Motor	6.1	Drive motor, S2=60min		kw	1.9	2.8
	6.2	Lift motor		kw	1.2	2.2
	6.4	Battery capacity, K5		V/Ah	24/65&130&195&260	
	6.5	Battery weight		kg	85/90	
Others	10.7	Noise level at operator's ear		dB(A)	＜75	

*BYD reserves the right to alter and modify the design, features and technical parameters of its products at any given time and without pre-advice, as products are subject to ongoing and continuous development.

LiP20P/25P Electric stand-on pallet truck

Identification	1.1	Manufacturer			BYD	BYD	BYD
	1.2	Model			LiP20S	LiP25S	LiP30S
	1.3	Drive			Electric		
	1.4	Operator type			Stand-on		
	1.5	Rated capacity	Q	kg	2000	2500	3000
	1.6	Load center	C	mm	600		
	1.8	Front overhang(Lifted/lowered)	X	mm	850/935		
	1.9	Wheel base(Lifted/lowered)	y	mm	1240/1320		
Weights	2.1	Net weight including battery		kg	650	725	725
	2.2	Axle load with load, front/rear		kg	1150/1500	1161/2064	1280/2445
	2.3	Axle load without load, front/rear		kg	520/130	570/155	570/155
Wheels	3.1	Wheel type			PU		
	3.2	Wheel size, front		mm	Φ230×75	Φ254×102	
	3.3	Wheel size, rear		mm	Φ85x110/Φ85x75		
	3.4	Auxiliary wheel size		mm	Φ100×50		
	3.5	Wheels, number front/rear (x=driven)			1×+2/2(4)		
	3.6	Track width, front	b10	mm	510		
	3.7	Track width, rear	b11	mm	370		
Basic Dimensions	4.4	Lift height	h3	mm	120		
	4.9	Height of support arms, Min./Max.		mm	1092/1407		
	4.15	Ground clearance, below fork	h13	mm	85		
	4.19	Overall length(pedal folded/down)	l1	mm	1795/2265		
	4.20	Length to face of forks	l2	mm	670		
	4.21.1	Overall width	b1	mm	732		
	4.22	Fork dimensions	s/e/l	mm	55×180×1150		
	4.25	Width across forks	b5	mm	640/550		
	4.32	Ground clearance, center of wheelbase	m2	mm	30		
	4.34.1	Aisle width for pallets 1000×1200 crossways			2345		
	4.34.2	Aisle width for pallets 800×1200 lengthways	Ast	mm	2255		
	4.35	Turning radius(lifted)	Wa	mm	1525		
Performance Data	5.1	Travel speed, with/without load		km/h	9.5/12	9.5/12	8/12
	5.2	Lifting speed, with/without load		mm/s	40/50	50/70	
	5.3	Lowering speed, with/without load		mm/s	50/40	50/50	
	5.8	Max. gradeability, with/without load		%	8/16	8/16	6/16
	5.10	Service brake			Mechanic		
Motor	6.1	Drive motor, S2=60min		kw	1.9	2.8	
	6.2	Lift motor		kw	1.2	2.2	
	6.4	Battery capacity, K5		V/Ah	24/65&130&195&260		
	6.5	Battery weight		kg	85/90		
Others	10.7	Noise level at operator's ear		dB(A)	<75		

*BYD reserves the right to alter and modify the design, features and technical parameters of its products at any given time and without pre-advice, as products are subject to ongoing and continuous development.

LiP20-Pedestrian pallet truck

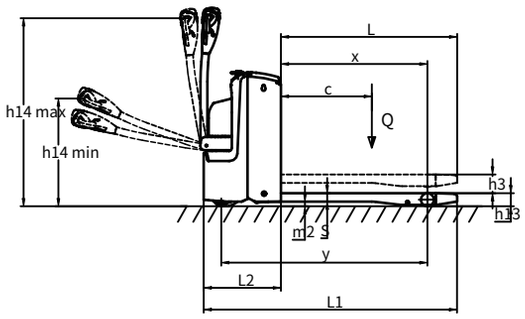

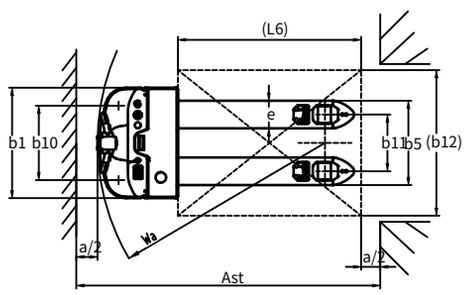

LiP20P-Electric ride-on pallet truck

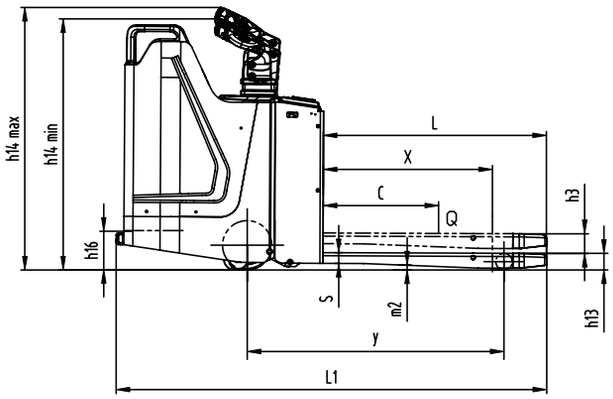

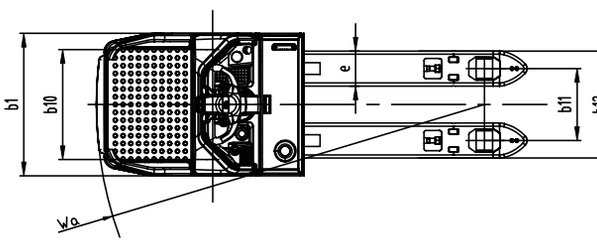

LiP25S-Electric ride-on pallet truck

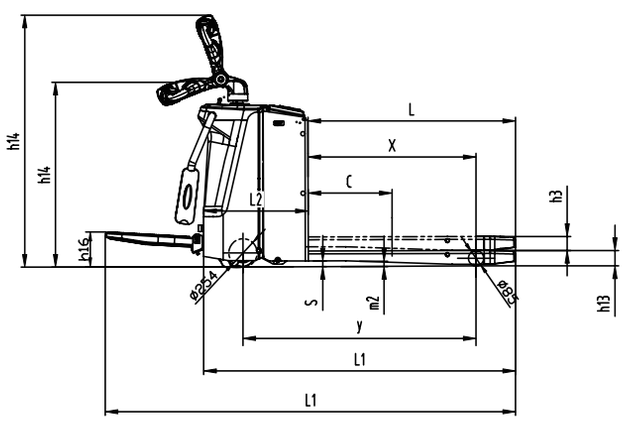

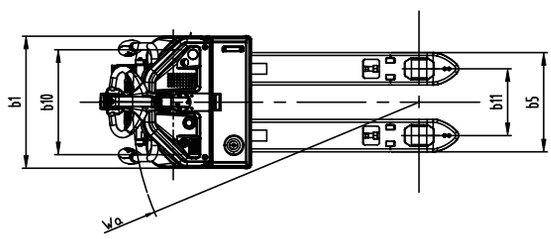

BYD Europe B.V.

s-Gravelandseweg 256, 3125 BK Schiedam, The Netherlands

0031 1020 70888 forklift@byd.com www.bydforklift.com

CE BYD forklifts conform to the European Safety Requirements

Printed in Feb 2025